FXLuminaire

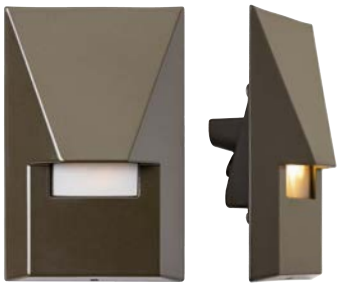

BV – Beveled

CV – Curved

FT – Flat

RD – Round

PROJECT

CATALOG #

TYPE

NOTES

# SL Wall Light DESIGNER PLUS

The versatile SL wall light is available with four faceplate options to maximize design flexibility in a range of applications.

## Quick Facts

- Tamper-resistant features
- Glare-free shielding
- Die-cast aluminum
- Two-layer marine-grade anodization and powder coat finish
- Cree® integrated LEDs
- Compatible with Luxor® technology
- Phase and PWM dimmable
- Input voltage: 10–15 V

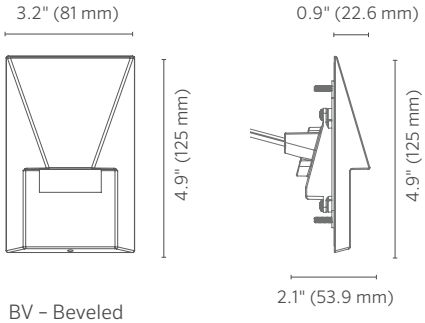


BV – Beveled
*(Measurements are the same for all four faceplate styles)*

# SL Wall Light SPECIFICATIONS

| Output | 1LED | 3LED | ZDC |
|---|---|---|---|
| **Total Lumens†** | 48 | 78 | 60 |
| **Input Voltage** | 10 to 15V | 10 to 15V | 11 to 15V |
| **Input Power (W)** | 2.0 | 4.2 | 6.0 |
| **VA** | 2.4 | 4.5 | 7.2 |
| **Efficacy (Lumens/Watt)** | 24 | 19 | 10 |
| **Color Rendering Index (CRI)** | 80+ | 80+ | 80+ |
| **Max Candela** | 53 | 73 | 56 |
| **Dimming** | PWM, Phase** | PWM, Phase** | -- |
| **RGBW Available** | No | No | Yes |
| **Luxor Compatibility** | | | |
| **Default** | Zoning | Zoning | -- |
| **ZD Option** | Zoning/Dimming | Zoning/Dimming | -- |
| **ZDC Option** | -- | -- | Zoning/Dimming/Color |
| **Minimum Rated Life (L90)** | 55,000 Hrs | 55,000 Hrs | 55,000 Hrs |

† *Measured using the 3,900K CCT lens. Multipliers for other CCTs include 0.80 (2,700K), 0.65 (4,500K), and 0.65 (5,200K).*
** *For optimal performance, use a trailing-edge, phase-cut dimmer.*

**FX Luminaire**
FX Luminaire is an industry-leading manufacturer of landscape and architectural lighting products with a focus on the advancement of LED technology and digital lighting control with zoning, dimming, and color adjustment capabilities. We offer a full spectrum of highly efficient lighting fixtures that can be utilized to create elegant, cutting-edge landscape lighting systems for commercial or residential applications. Our products are available exclusively via our extensive professional distributor network.

**Materials**
Die-cast A380 aluminum body with stainless steel setscrews, mounting brackets, and fasteners.

**Socket**
Socket contains MoistureBlock™ technology, preventing moisture from wicking up into sealed areas of the fixture.

**Warranty**
10-year limited warranty

**Lamp**
Integrated module with Cree LEDs. Gold-plated connectors and conformal coating for maximum reliability and corrosion resistance. Proprietary onboard intelligent driver uses firmware-controlled temperature regulation, maximizing LED life. Field upgradeable and replaceable, the LEDs are rated to 55,000 hrs. Maximum drive current: 1 A.

**Optics**
Polycarbonate color temperature adjustment lenses included with luminaire: 2,700K (preinstalled), 3,900K (no lens), 4,500K, and 5,200K. Beam angle is calculated using LM-79 method for SSL fixtures.

**Wiring**
18 AWG (1 mm); SPT-1W; 220°F (105°C); 300V; 10' (3 m) length.

**Faceplate**
Die-cast A380 aluminum faceplate with UV-stabilized acrylic lens.

**Power**
Input 0–15 VAC/VDC, 50/60Hz. Remote transformer required (specify separately).

**Housing**
Die-cast A380 aluminum body with capacity for 1LED, 3LED, or ZDC integrated LEDs.

**Lens**
UV-stabilized acrylic with shock resistance and high tolerance for thermal expansion and stress.

**Finish**
Two-layer protection of sulfuric acid anodization and polyester TGIC powder coat, providing superior outdoor weathering in all conditions. Tested to ASTM standards.

**Ambient Operating Temperature**
0°F to 140°F (-17°C to 60°C)

**Manufacturing**
ISO 9001:2015 certified facility

**Hardware**
Stainless steel machine screws.

**Control**
ZD or ZDC utilizes Luxor technology to zone fixtures in up to 250 groups, dim each group in 1% increments between 0 and 100%, or change to one of 30,000 colors with RGBW LEDs. Select the ZD option for zoning/ dimming or ZDC for zoning/dimming/color. Standard fixture is zoneable with Luxor.

**Sustainability**
Innovation meets conservation in the design and manufacturing of our products. Where we can, we use recycled materials while maintaining superior functionality. Our LED products provide high-quality light at optimal energy efficiency, lifespan, and durability.

**Weight**
1.0 lb. (0.5 kg)

**Installation Requirements**
Designed for recessed installation in a vertical surface. Included mounting bracket fits most single-gang junction boxes.

**Listings**
c UL us LISTED 3YJ8
RoHS COMPLIANT
IP 66

# SL Wall Light ORDERING INFORMATION

| Fixture | Luxor Option | Output | Faceplate | Finish |
|---|---|---|---|---|
| SL | **[default]** *Zone* | **1LED** *48 Lumens* | **BV** *Beveled* | **BZ** *Bronze Metallic* |
| | **ZD** *Zone/Dim* | **3LED** *78 Lumens* | **CV** *Curved* | **DG** *Desert Granite* |
| | **ZDC** *Zone/Dim/Color* | **[default ZDC option]** *60 Lumens* | **FT** *Flat* | **WI** *Weathered Iron* |
| | | | **RD** *Round* | **SB** *Sedona Brown* |
| | | | | **FB** *Black* |
| | | | | **WG** *White Gloss* |
| | | | | **FW** *Flat White* |
| | | | | **AL** *Almond* |
| | | | | **SV** *Silver* |

EXAMPLE FIXTURE CONFIGURATION:
SL-ZD-3LED-CV-BZ

| SL | - | | - | | - | | - | |
|---|---|---|---|---|---|---|---|---|

## ACCESSORIES: Specify Separately

| Accessories | Code |
|---|---|
| **SINGLE-GANG JUNCTION BOX** *New work (18 in$^3$/295 cm$^3$)* | JB1GNWNM |
| **DIMMABLE TRANSFORMER** *60W, 120V input, 12V output* | ST120DIM |
| **TRANSFORMER** *80W, 277V input, 12V output* | ST277 |

# SL Wall Light PHOTOMETRICS

## SL 1LED Isofootcandle Plot

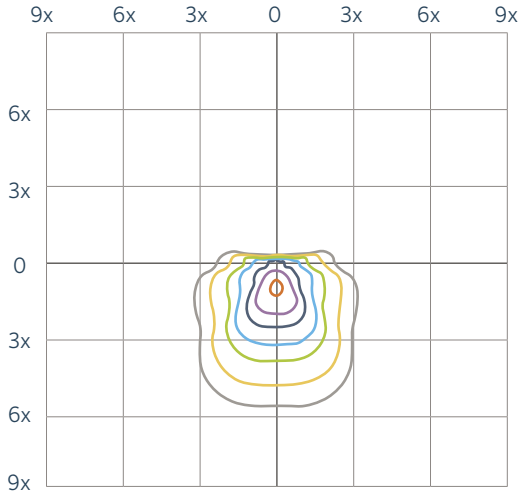


| | | |
|---|---|---|
| 20 fc (215 lx) | 2.5 fc (27 lx) | 0.2 fc (2 lx) |
| 10 fc (108 lx) | 1 fc (11 lx) | 0.1 fc (1 lx) |
| 5 fc (54 lx) | 0.5 fc (5 lx) | 50% Max Cd |

Mounting Height: 1' (0.3 m) Total LLF: 1

## SL 3LED Isofootcandle Plot

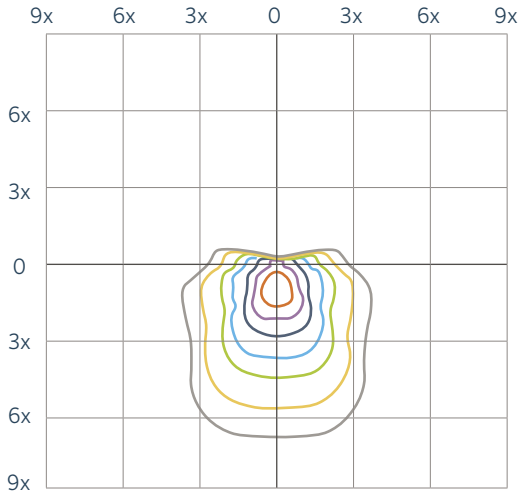


| | | |
|---|---|---|
| 20 fc (215 lx) | 2.5 fc (27 lx) | 0.2 fc (2 lx) |
| 10 fc (108 lx) | 1 fc (11 lx) | 0.1 fc (1 lx) |
| 5 fc (54 lx) | 0.5 fc (5 lx) | 50% Max Cd |

Mounting Height: 1' (0.3 m) Total LLF: 1

## SL ZDC Isofootcandle Plot

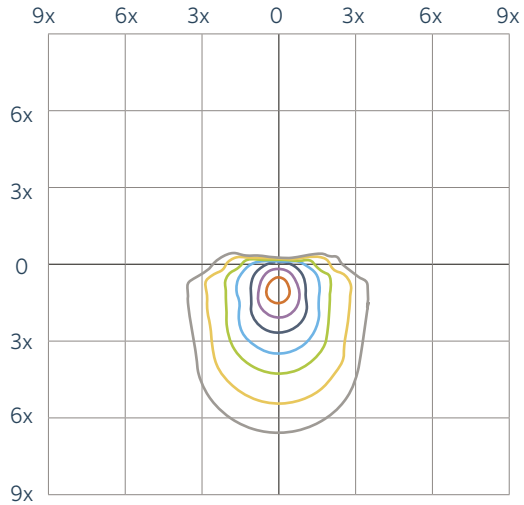


| | | |
|---|---|---|
| 20 fc (215 lx) | 2.5 fc (27 lx) | 0.2 fc (2 lx) |
| 10 fc (108 lx) | 1 fc (11 lx) | 0.1 fc (1 lx) |
| 5 fc (54 lx) | 0.5 fc (5 lx) | 50% Max Cd |

Mounting Height: 1' (0.3 m) Total LLF: 1