4. Remote & Switch control

Instructions of The Remote Control Button			
Key	instructions	Key	instructions
A	Mode change (14 programs)	C	Slow down in "fading effect" & " Dynamic color chaging" mode -Reset the lamp by press 5S+ decrease brightness in solid color
B	Speed up in "fading effect" & "Dynamic color chaging" mode,increase brightness in solid color	D	-Switch on/off by press 1~2S
Note: Remote effective distance is 50 meters, to control lamps in distance of more than 50 meters, use switch control instead of remote control. Change mode by switch on/off.			

14 RGB Programs;
Red, Green, Blue
R+G, G+B, R+B, R+G+B
Dynamic change: R-G, G-B, R-B, R-G-B, Colorful
R-G-B Fading, Colorful fading

Simply connect live and neutral wires onto any one of wires of the lamp

Diagram:

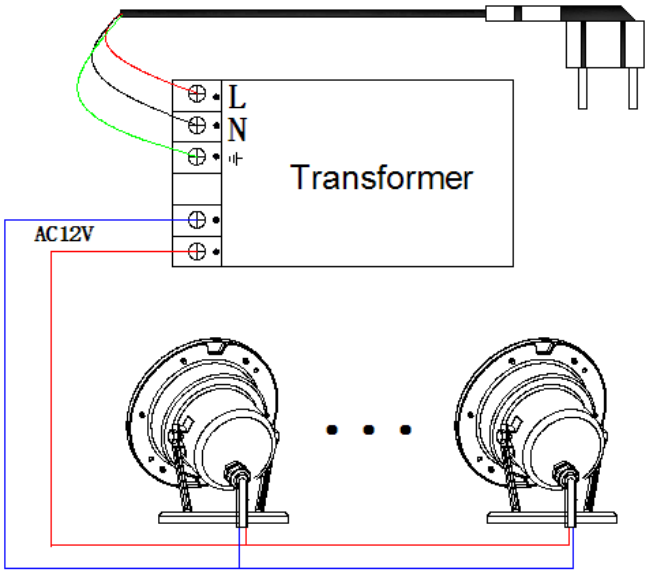

IP68 R&TTE CE FC RoHS

Without hole LED light Installation method

1. Install on the floor

STEP 1:

Fix the underframe to the concrete by anchors and screws

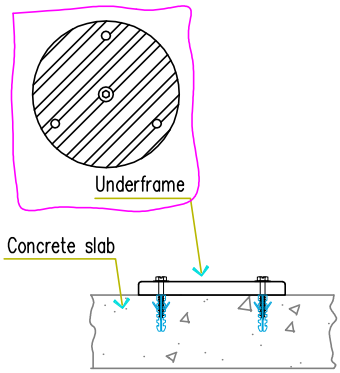

STEP 2:

Fix the lamp to underframe by bolt

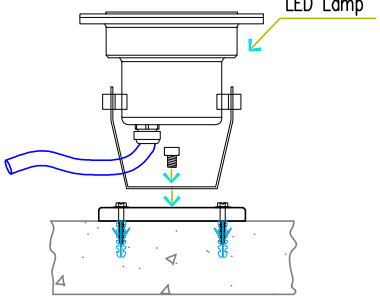

The lamp should be totally under water

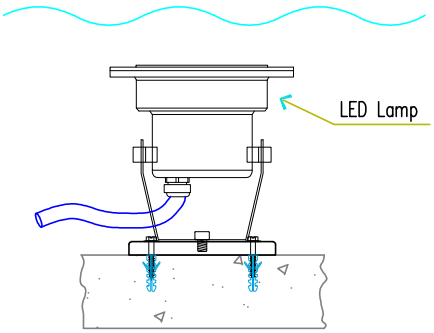

2. Fix to the wall

STEP 1:

Fix the underframe to the concrete by anchors and screws

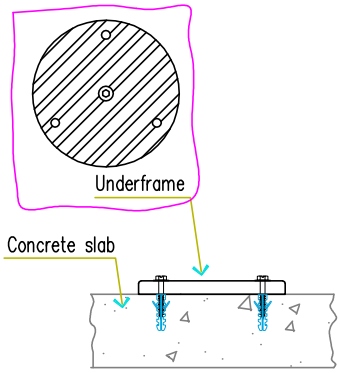

STEP 2:

Fix the lamp to underframe by bolt

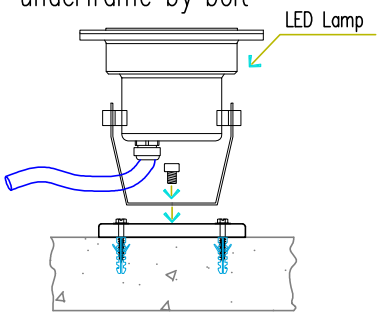

The lamp should be totally under water

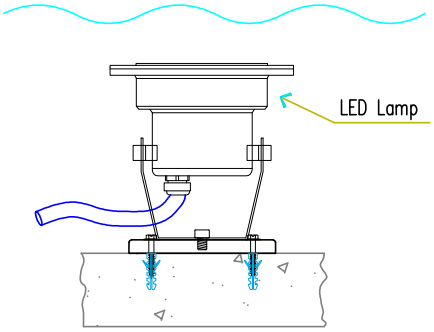

Without hole LED light Installation method

3. Install beside the nozzle

STEP 1:

Fix the clamp support to the pipe

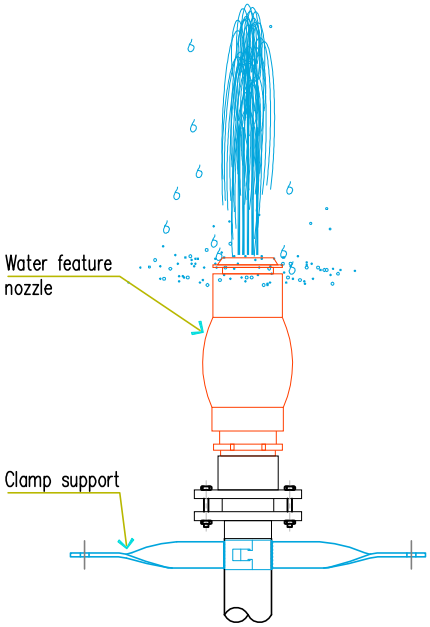

STEP 2:

Fix the lamp to clamp support by bolt & nut

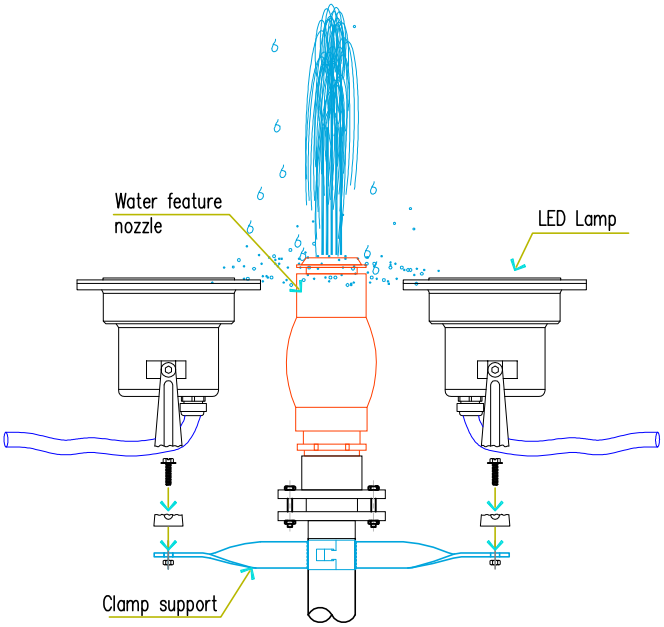

The lamp should be totally under water

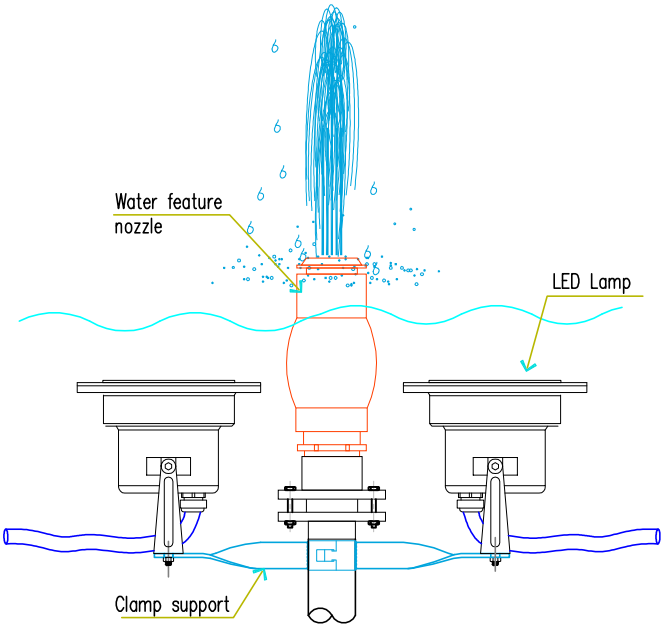

Without hole LED light Installation method

3. Install to the ring spray

STEP 1:

Fix the clamp support to the pipe

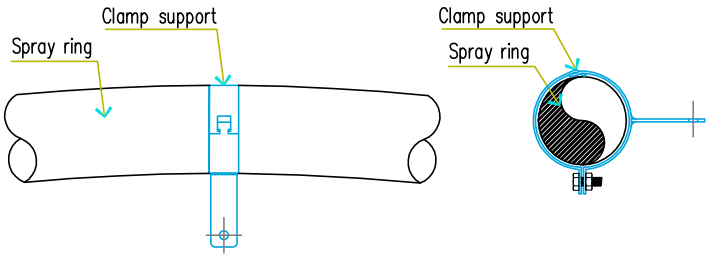

STEP 2:

Fix the lamp to clamp support by bolt & nut

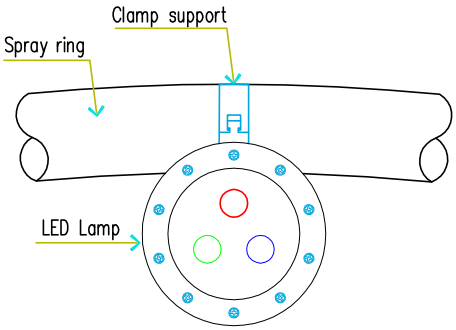

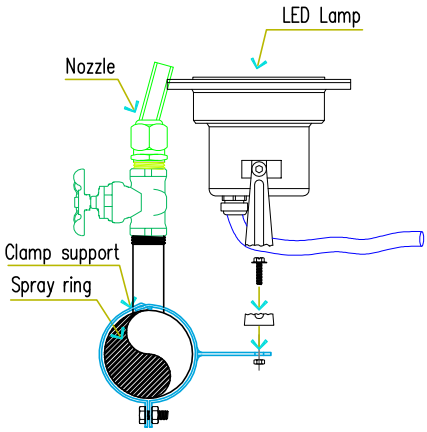

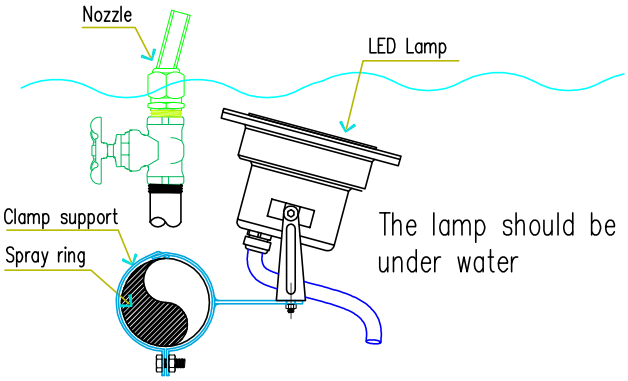

The lamp should be totally under water

With hole LED light Installation method

Install with nozzle

STEP 1:

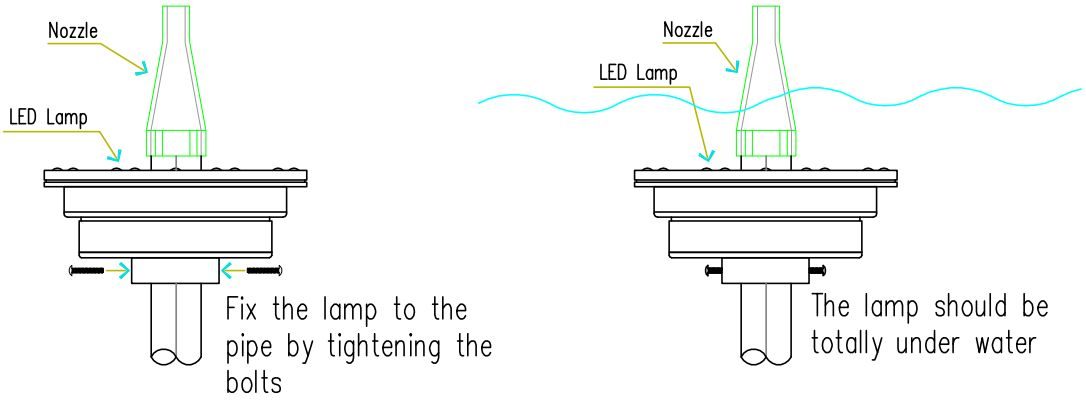

Note: This information is used for basic installation, please contact Viet Garden Company for more details. Hotline: 84 - (0) - 918 099 856; Email: info@densanvuon.com.vn